PACKAGING plus+

ST6
DIP-STYLE SHRINK TANK



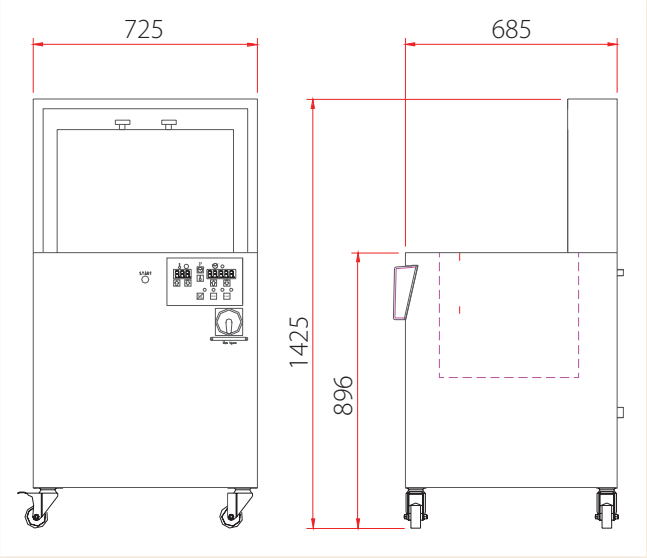

MACHINE INFORMATION ST6

Machine Material	All Stainless
Machine on Casters	Standard
Machine Dimensions	725 x 685 x 1425 mm
	28.5 x 27 x 56.1 in
Platform Dimensions	610 x 405 x 255 mm
	24 x 16 x 10 in
Machine Controls	Digital / Programmable
Weight Capacity	45 lbs
Dipping Time	Variable 1-999 sec.
Water Volume	84 L / 22 gal
Water Inlet Size	½ in NPT Male
Water Drain Size	1 in NPT Female
Machine Weight	159 kg / 350 lbs
Electrical Connection	220 V / 3 Ph / 60 Hz / 35 A
Electrical Heating	12 kW

FEATURES & BENEFITS:

ST6 Shrink Tank is the ideal companion for single or double chamber machines. This stainless steel semi-automatic dip tank is perfect for small to medium packaging operations.

- Compact commercial grade machine
- Digital programmable controls
- Water overflow control system
- Automatic temperature control
- Steam cover lid included
- 12-month warranty on parts - 90 day warranty for labor
- Spare parts kit included